JUSTIFICATION OF KINEMATIC AND DYNAMIC PARAMETERS OF AN ECCENTRIC VIBRATORY DRIVE FOR ENERGY-EFFICIENT HEAT-ACCUMULATING DRYING UNITS

Akhmedov Azamat Khaitovich DSc, Professor, Dept. of Theoretical Mechanics, Theory of Mechanisms and Machines, Tashkent State Technical University named after I.A. Karimov, 100095 Tashkent, Uzbekistan
Mamadaliev Khayitali Jaloliddin ugli PhD, Dept. of Engineering Technologies, Kokand State University, 150700 Kokand, Uzbekistan, uzxayitali@gmail.com

Annotatsiya: Maqolada issiqlik akkumulyatorli quritish qurilmasining mexanik xossalarini vibratsion ekssentrik mexanizm yordamida yaxshilash tadqiq etilgan. Rezonansga yaqin rejimda issiqlik almashinuvi 15–22% ga oshib, quritish vaqti 18% ga va energiya sarfi 39% ga kamaygan.

Kalit so‘z va iboralar: vibratsion mexanizm, ekssentrik qurilma, issiqlik akkumulyatori, quritish jarayoni, energiya samaradorligi, konvektiv issiqlik almashinuvi, rezonans chastotasi, dispers materiallar.

Аннотация: Исследовано применение вибрационного эксцентрикового механизма для улучшения механических свойств сушильной установки с теплоаккумулятором. В околорезонансном режиме теплообмен вырос на 15–22%, время сушки сократилось на 18%, энергозатраты снизились на 39%.

Ключевые слова и фразы: вибрационный механизм, эксцентриковое устройство, теплоаккумулятор, процесс сушки, энергоэффективность, конвективный теплообмен, резонансная частота, дисперсные материалы.

Annotation: This paper investigates a vibrational eccentric mechanism to improve the mechanical properties of a heat-accumulating drying unit. Near-resonance operation increased convective heat transfer by 15–22%, reduced drying time by 18%, and lowered energy consumption by 39%.

Key words and phrases: vibrational mechanism, eccentric device, heat accumulator, drying process, energy efficiency, convective heat transfer, resonance frequency, dispersed materials.

Introduction

Today, in the scientific centers of the world's leading countries—including Russia, Germany, France, Portugal, China, and Turkey—large-scale research is conducted to develop energy-efficient and environmentally friendly methods for drying plant products [11, 22]. Significant results have been achieved in developing systems based on phase-change heat-accumulating devices and integrating them into post-harvest seed and agricultural drying technologies [14, 15, 16, 19, 20, 21]. Furthermore, vacuum-drying aggregates equipped with thermal accumulators

effectively preserve the biological quality of desert fodder plant seeds and fruit-vegetable products [17, 18].

The efficiency of drying equipment largely depends on the perfection of its drives, mechanical components, and control mechanisms [1, 3, 4]. Researchers such as M. Bergstrasser, P. Muller, M. Redwood, Z. Levai, M. French, Y. Yokoyama, S. Okabe, O. Kiyoshi, W. Zhang, R. Khurmi, and J. Gupta have investigated frictional and vibrational mechanisms and developed their dynamic and kinematic models [11]. Scientists from CIS countries—including I.I. Artobolevskiy, K.V. Frolov, A.P. Bessonov, I.I. Blexman, V.L. Veyts, O.D. Alimov, M.T. Mamasaidov, U.A. Djoldasbekov, N.I. Kolchin, M.Z. Kolovskiy, and I.V. Kragelskiy—established profound scientific schools in the theory, kinematics, and dynamics of mechanisms. Among Uzbek scientists, the works of X.X. Usmanxojaev, R.I. Karimov, K.A. Karimov, B.A. Kushimov, A.Kh. Akhmedov, Sh.P. Alimukhamedov, A.X. Umurzakov, and Kh.Zh. Mamadaliev have demonstrated the application of controlled mechanisms, vibromechanics, stationary and non-stationary heat-mass transfer modeling, and advanced functional materials in drying technologies [2, 5, 6, 7, 8, 9, 10, 12, 13]. In this paper, the application of a vibrational eccentric mechanism in a heat-accumulator-based drying system is theoretically and practically substantiated to enhance structural and operational efficiency.

Mechanical Properties of the Drying and Heat Accumulator Devices

The mechanical properties of the drying unit and heat accumulator determine their reliability, efficiency, and service longevity [1, 5, 18]:

• **Structural stability and rigidity:** High-strength steel or aluminum alloys for the frame and housing ensure resistance to loads and deformation, while welded and bolted joints prevent bending and twisting [1, 4].

• **Resistance to vacuum and pressure:** The sealed vacuum-drying enclosure ensures gas tightness using silicone, fluoroelastomer, and flexible composite materials [12, 13, 17, 19], operating reliably without cracks or deformations under pressure differences of 0.05–0.15 MPa.

• **Vibrational and dynamic characteristics:** Natural frequencies of device components are synchronized with the controlled vibrational eccentric mechanism [3, 4, 5], while rubber dampers maintain centrifugal forces and amplitudes (25 Hz, 1 mm) within structural durability limits.

• **Mechanical transmissions and drive elements:** Optimal motor torque, gear ratio, gearbox precision, and NSK/SKF bearings ensure stable control and load capacity of the eccentric drive [3, 4].

• **Thermo-mechanical adaptability:** Thermal expansion in the heat accumulator is compensated via flexible joints, while thermal insulation minimizes environmental heat loss [7, 9, 16].

• **Load capacity, mobility, and maintenance:** The modular platform supports 50 kg per layer (up to 200 kg total) with mobile wheel/winch mechanisms and automatic oil-channel lubrication for bearings and gearboxes [1, 18, 20].

Advantages of the Vibrational Eccentric Mechanism

Integrating a vibrational eccentric mechanism into the drying unit provides key advantages [1, 3, 18, 21]: uniform distribution of the dispersed product across

the drying surface and pore-free paraffin packing in the heat accumulator [1, 18]; improved contact with air and radiative-convective heat flows [6, 8]; prevention of particle adhesion and clogging [22]; and enhanced heat exchange efficiency [7, 9, 10]. Collectively, these factors improve process stability, energy efficiency, and operational reliability (Figure 1).

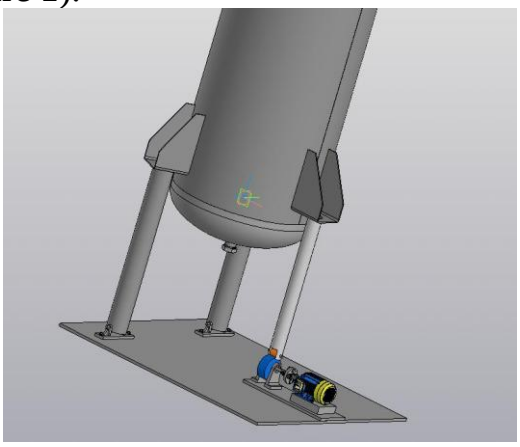

Figure 1. Bottom view of the heat accumulator device equipped with a vibrational eccentric mechanism.

Theoretical Basis for the Application of the Vibrational Eccentric Mechanism

The physical mechanism of the vibrational eccentric system is based on centrifugal force generation and the resonance effect under coupled mechanical and thermal fields [1, 3, 5, 8]. Depending on the eccentric angle and angular velocity, an oscillating force is generated on the material surface:

$$F = m \cdot r \cdot \omega^2 sin\varphi$$

When the excitation frequency approaches the natural frequency of the device, the vibration amplitude reaches its rational maximum, providing maximum efficiency with minimal energy input [2, 5, 14]. Under vibration, seeds, vegetable slices, or fruit particles spread evenly across the drying surface, ensuring uniform air and heat flow distribution throughout the multiphase material layer [6, 10, 15]. To determine the velocity profile in stationary and non-stationary modes [2, 5], the motion (transfer) equation is expressed as:

$$\frac{\partial^2 v}{\partial t^2} + pv = \frac{1}{m} F(x,t)$$

where *F(x, t)* is the vibrational force function acting on the system [3, 5]. Vibration disrupts the laminar air boundary film on the material surface [6, 7, 8], increasing the convective heat transfer coefficient according to the empirical relationship [7, 9, 10]:

$$H = h_0(1 + \alpha\, Re^n)$$

where α and n are empirical coefficients determined experimentally [7, 10].

Optimal Parameters, Experimental Studies, and Techno-Economic Efficiency

As optimal geometric and kinematic parameters, the eccentric angle is selected within 15–30° and the eccentric height between 5–10 mm, ensuring smooth displacement of dispersed material without sparking or excessive impact loads [1, 3, 4]. The eccentric motor is controlled via a PWM (Pulse Width Modulation) regulator

and monitored via flexible voltage and frequency sensors [3, 12, 13]. The optimal operating regime corresponds to a frequency of 15–25 Hz and an amplitude of 0.5–2 mm, maintaining the material in a vibro-fluidized layer state [1, 10].

Experimental investigations were conducted using desert fodder plant and alfalfa seeds, bean seeds, and carrot slices at three vibration frequencies: 20, 30, and 40 Hz [15, 16, 19, 20, 22]. The combination of 25 Hz frequency and 1 mm amplitude produced the best performance: drying time was reduced by 18%, the convective heat transfer coefficient increased by 22%, and adhesion and clogging occurrences decreased by 95% [1, 10].

According to techno-economic calculations, the additional power consumption of the vibrational mechanism does not exceed 0.15 kW [1, 21]. The mechanical simplicity of the eccentric drive extends service life by 1.3 times and reduces maintenance costs by 25%, while overall energy efficiency increases by 10–15% and system productivity rises by 12–18% compared to traditional dryers [1, 7, 9, 16, 20].

Conclusions

1. Operating the vibrational eccentric mechanism near the resonance frequency increased the convective heat transfer coefficient by 15–22%, significantly enhancing drying efficiency [1, 7, 10].

2. Experimental tests confirmed that at 25 Hz frequency and 1 mm amplitude, the drying duration decreased by 18% [15, 20, 22].

3. Specific energy consumption in the vibrational heat-accumulating dryer decreased from 2.8 kWh/kg to 1.7 kWh/kg, achieving 39% energy savings [16, 18, 21].

4. Process duration was reduced from 6.0 hours to 3.8 hours, achieving a 37% increase in drying rate compared to conventional convective dryers [8, 17, 19].

5. Drying cost per kilogram of product decreased from 2520 UZS to 1530 UZS (39% cost savings), confirming high dynamic, thermo-mass transfer, and techno-economic efficiency [1, 20].

References

1. Akhmedov A.Kh., Mamadaliev Kh.Zh. Application of a vibrational eccentric mechanism to improve the mechanical properties of drying and heat accumulator devices // Journal of Multidisciplinary Sciences and Innovations. – Berlin: IJMRI, 2025. – Vol. 4, No. 9. – Pp. 946–951 (6 p.).

2. Akhmedov A.Kh., Mamadaliev Kh.Zh. Dispers materiallarni quritish uchun statsionar va nostatsionar masalalarni matematik modellashtirish // “Tadqiqot va innovatsiyalar” jurnali. – Toshkent: Tadqiqot va innovatsiyalar, 2023. – I-jild, 12-son. – B. 36–42 (6 b.).

3. Akhmedov A.Kh., Mamadaliev Kh.Zh. Boshqariladigan mexanizm qurilmalarida tebranma harakatlarni tadqiq etish // “Tadqiqot va innovatsiyalar” jurnali. – Toshkent: Tadqiqot va innovatsiyalar, 2023. – I-jild, 12-son. – B. 43–50 (6 b.).

4. Akhmedov A.Kh., Mamadaliev Kh.Zh. Mashinasozlikda mexanizm qurilmalari tebranma harakatlarini tadqiqi // Xalqaro ilmiy-texnik anjuman materiallari. – Toshkent: TDTU nashriyoti, 2024. – B. 432–434 (3 b.).

5. Akhmedov A.Kh., Mamadaliev Kh.Zh. Statsionar va nostatsionar rejimlarda quritish jarayonining mexanik tahlili // “Mexanikada fan, ta’lim va ishlab chiqarish integratsiyasi” xalqaro anjumani. – Qarshi: QMII nashriyoti, 2025. – B. 60–63 (4 b.).

6. Akhmedov A.Kh., Mamadaliev Kh.Zh. Ko‘p fazali nam materiallarda quritish jarayonining matematik modeli va issiqlik-namlik almashinuvi // V xalqaro ilmiy-texnik anjuman materiallari. – Toshkent: TIQXMMI nashriyoti, 2025. – B. 58–59 (2 b.).

7. Akhmedov A.Kh., Mamadaliev Kh.Zh. Issiqlik va massa almashish jarayonlari asosida issiqlik akkumulyatori parametrlarini matematik modellashtirish // Educational Research in Universal Sciences. – Toshkent: ERUS, 2025. – Vol. 4, No. 8. – Pp. 158–164 (7 p.).

8. Akhmedov A.Kh., Mamadaliev Kh.Zh. Tashqi fizik maydonlar ta’sirida quritish jarayonining matematik modeli va analitik tahlili // Educational Research in Universal Sciences. – Toshkent: ERUS, 2025. – Vol. 4, No. 8. – Pp. 166–172 (7 p.).

9. Akhmedov A.Kh., Mamadaliev Kh.Zh. Математическое моделирование параметров теплоаккумулятора в системах сушки // “Инновация – 2025” XXVIII анжумани материаллари. – Тошкент: ТДТУ нашриёти, 2025. – Б. 112–113 (2 б.).

10. Akhmedov A.Kh., Mamadaliev Kh.Zh., Akhmedov U.M. Mathematical Modeling and Analytical Solution of the Seed Drying Process Based on a Heat Accumulator // Proc. Int. Conf. on Applied Innovations in IT (ICAIIT). – Koethen: Anhalt University, 2026. – Vol. 14(3). – Pp. 25–30 (6 p.).

11. Karimov K.A., Kushimov B.A., Akhmedov A.Kh. Development of mathematical models, resource-energy-saving technologies and designs for drying seeds of dispersed materials: Monograph. – Tashkent: ZEBO PRINTS, 2022. – 184 p.

12. Kushimov B.A., Haydarov H.H., Mamadaliev Kh.Zh. Emerging Trends in Biomaterials for Tissue Engineering and Regenerative Medicine // International Journal of Scientific Trends (IJST). – Austin: IJST Publishing, 2023. – Vol. 2, No. 7. – Pp. 14–17 (4 p.).

13. Kushimov B.A., Haydarov H.H., Mamadaliev Kh.Zh. Materials for flexible and stretchable electronics // Academicia Globe: Inderscience Research. – Jakarta: Academia Science, 2023. – Vol. 4, No. 7. – Pp. 105–108 (4 p.).

14. Kushimov B.A., Karimov K.A., Akhmedov A.Kh., Mamadaliev Kh.Zh. Theoretical preconditions for the development of mathematical models of the technology of desert plant drying // E3S Web of Conferences (AFE-2023). – Les Ulis: EDP Sciences, 2023. – Vol. 462, No. 02021. – 12 p.

15. Kushimov B.A., Karimov K.A., Mamadaliev Kh.Zh. Formulation and development of energy-saving technology for drying seeds of desert fodder plants // IOP Conf. Series: Earth and Environmental Science. – Bristol: IOP Publishing, 2021. – Vol. 937, No. 032056. – 11 p.